STAMP Applied to Workplace Safety

Emily Howard, Ph.D., Senior Technical Fellow
Lori Smith, EHS Deputy Chief Engineer

March 21, 2016

The Team

Dr. Emily Howard, Human Factors Engineering, Boeing

- Senior Technical Fellow (one of 66 company-wide)
- Human systems integration lead for numerous BDS products
- Specialist in human information processing and decision-making

Dr. Larry Hettinger, Human Factors Engineering, Liberty Mutual

- Principal Research Scientist at the Liberty Mutual Research Institute for Safety
- Conducts research on sociotechnical system influences on safety in complex work environments
- 30+ years' experience in human-systems integration research, design and education

Lori S. Smith, Deputy Chief Engineer, EHS

- Engineering analyst for workplace safety
- Led the exploration of STAMP to Boeing factory areas
- EHS focal for new technology development for safety in factory areas

Outline

Project Overview	Lori Smith
Historical Perspective on Workplace Safety	Larry Hettinger
Role of Human Factors in STAMP	Emily Howard
STAMP Application to Production/Delivery	Emily Howard
Summary and Conclusions	Emily Howard

The Boeing Company

- Products and services support to customers in more than 150 countries
  - Revenue in 2015: $96 billion
  - 70 percent of commercial airplane revenue historically from customers outside the United States
- Manufacturing, service and technology partnerships with companies around the world
  - Contracts with more than 20,000 suppliers and partners globally
- Research, design and technology-development centers and programs in multiple countries
- Approximately 160,000 Boeing employees across the United States and in more than 65 countries

Partnering worldwide for mutual growth and prosperity

Disclaimer: The information in this presentation is not intended as direction or recommendations, but simply sharing how the Boeing Company is using STAMP to make our workplace safer.

Boeing Commercial Aircraft (BCA)

2015 revenues of **$66 billion**

Headquartered in the Puget Sound region of Washington state

Approximately **83,000 employees**

Offers a family of airplanes and a broad portfolio of aviation services for passenger and cargo carriers worldwide

- Boeing airplanes represent about half of the world's fleet, with more than 10,000 jetliners in service
- About **70 percent** of Commercial Airplane sales (by value) go to customers outside the United States

Boeing Defense, Space & Security (BDS)

Designs, builds and supports net-enabled platforms and systems for government and commercial customers

Formed in 2000 to integrate Boeing's defense, space, intelligence and communications capabilities

Headquartered in St. Louis, Mo., with global operations in three countries and 26 states

Has balanced backlog across all markets including a strong mix of development, production and support contracts

2015 revenues of $30 billion

Approximately 50,000 employees

Boeing – Building a Safer Workplace

In July 2013, Go for Zero – One Day at a Time began

- Working toward aggressive safety goals to significantly reduce injuries
- Leveraging system safety approaches to the workplace
  - Boeing has the safest aircraft in the world – why not the safest workplace?
- Facing challenges
  - Highly complex systems
    - Interactions between hardware, software, humans and environment
  - Dynamic environment
  - Schedule-driven culture

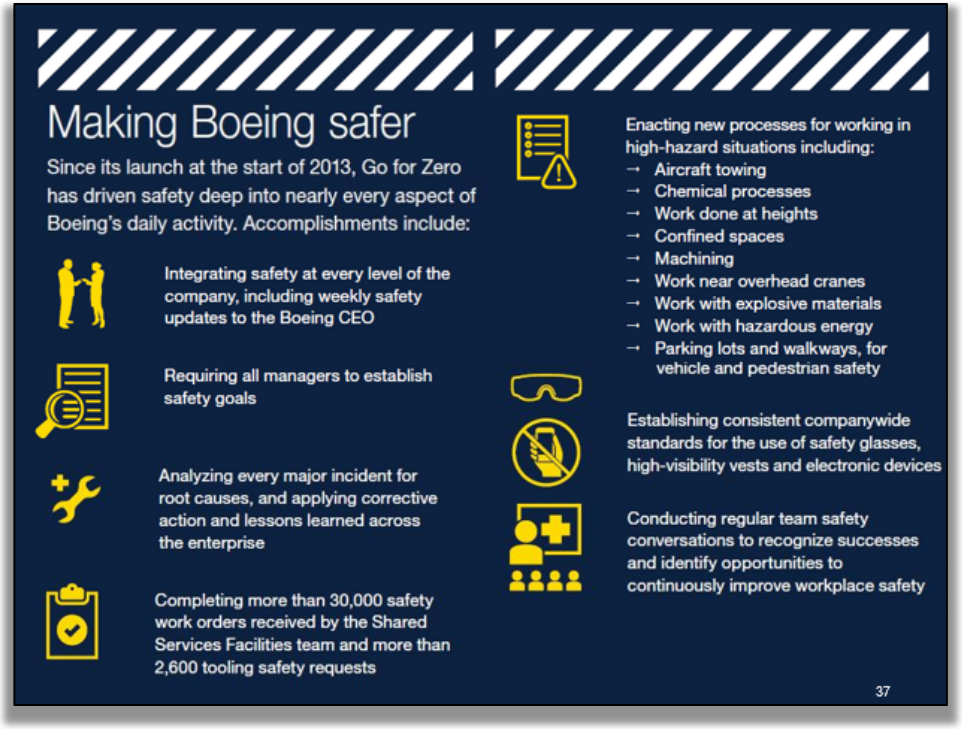

Disclaimer: The information in this presentation is not intended as direction or recommendations, but simply sharing how the Boeing Company is using STAMP to make our workplace safer.

Project Overview

- In May 2015, Boeing decided to add "systems-thinking" based approach (STAMP) to our Go for Zero activities to improve the results achieved so far.
- Boeing initiated two pilot studies to determine how feasible it is to leverage STAMP for workplace safety.
- STAMP modeling and analyses have identified many specific improvements that are needed.
- Implementation of these improvements is in progress.

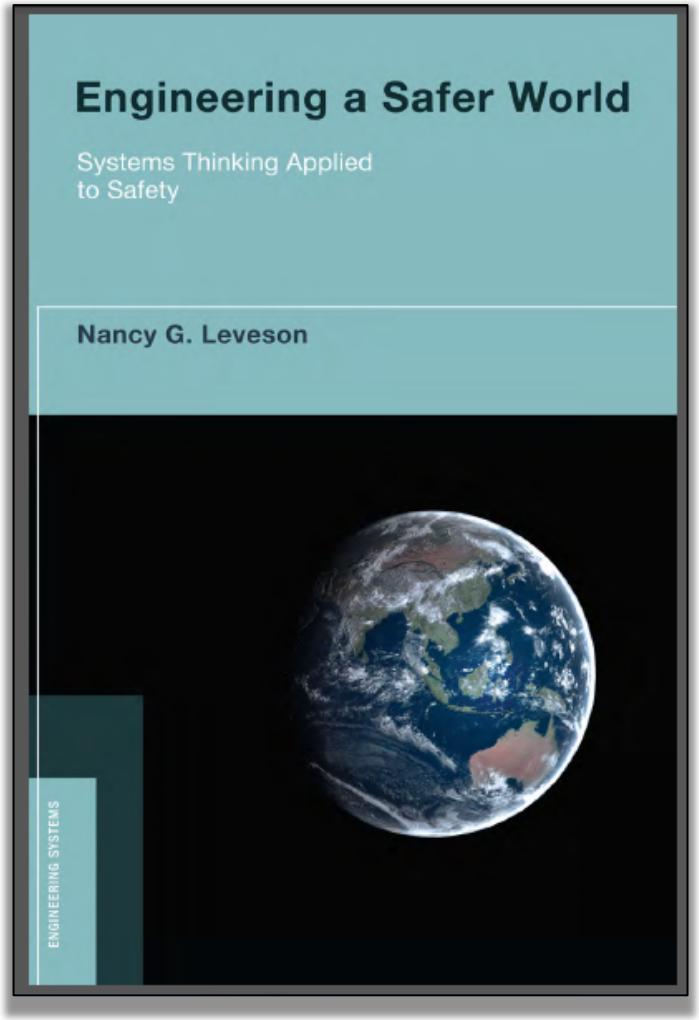

How We Got Involved with STAMP

Recent challenge from our CEO:
"Achieve step function improvement in workplace safety"

The engineering vice-president for Boeing Defense, Space and Security retained the services of Dr. Nancy Leveson in May 2015.

Guided by Dr. Leveson, a limited engineering study team was tasked to explore STAMP methodology and determine its feasibility for application to workplace safety.

Dr. Leveson recommended reaching out to Liberty Mutual Research Institute for Safety who have partnered with us.

Historical approaches to workplace safety

Systems Thinking in Engineering a Safer Workplace

"Humans do not always follow procedures, nor should they. We use humans to control systems because of their flexibility and adaptability to changing conditions and to the incorrect assumptions made by the designers" (Leveson, *Engineering a Safer World*, p. 273)

"Use procedures, policies, signage only as a last resort. This should not be the default response. People often do not follow procedures because they often hinder the effective/efficient operation of the system and the overall goals of their job." Leveson

Start with a Specific View of Human Factors

Boeing's human factors' expertise derives from decades of commercial and military aviation research.

- Our mission success can only be assured through successful human performance.

Boeing needs to identify systemic influences on human judgment and behavior.

Don't stop with what people did wrong, but try to understand why it made sense to them to do what they did.

Determine how to change the environment in order to change the human behavior.

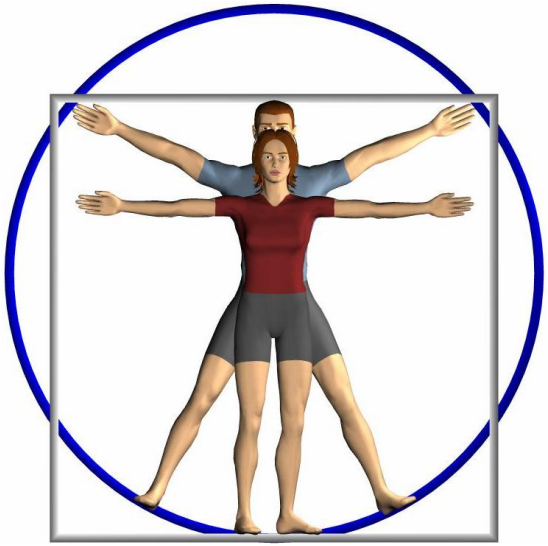

Focus on changing the environment, process and/or tools rather than trying to change the person!

General Approach to Apply Systems Thinking to Workplace Safety

1. Define the problem – use good systems engineering
2. Identify goals, desired end state and how to get there
3. Model and analyze current workplace safety environment to identify RAA and build a workplace safety control structure
4. Use STPA to identify where unsafe control actions exist in the worker's environment and then implement controls to keep bad things from happening
5. Improve learning from events (incidents, accidents) and use that information to redesign the system with new constraints

Improving Learning from Events

Minimize hindsight bias

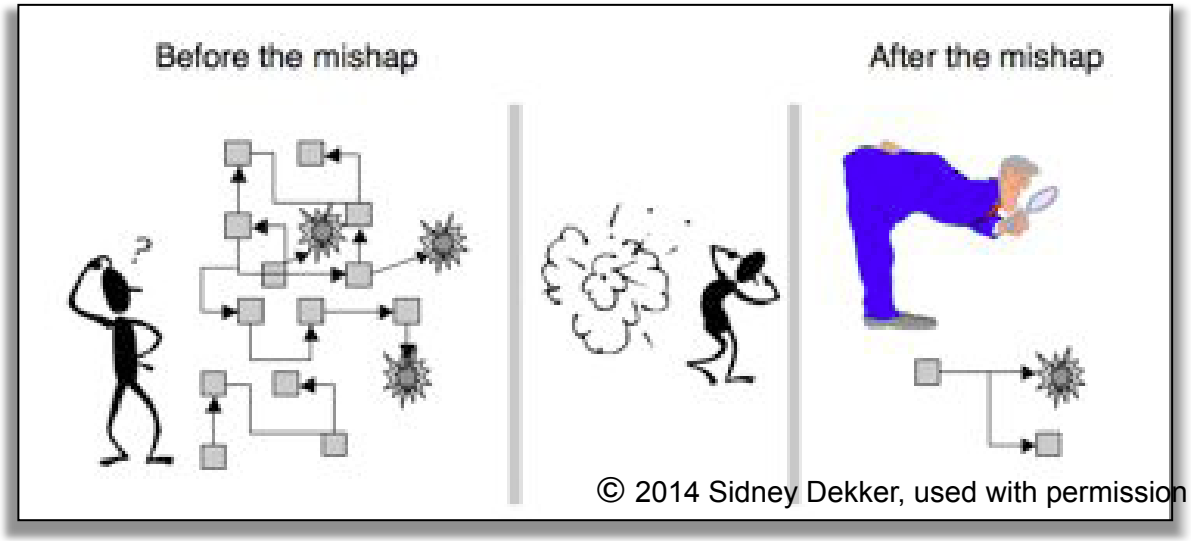

Provide a framework or process to assist in understanding entire accident process and identifying systemic factors

Get away from blame (“who”) and shift focus to “why” and how to prevent in the future

Avoiding Hindsight Bias

Don't stop after identifying what person did wrong

Ask:

1. **Why did it made sense for them to do what they did?**
2. **How can a change in context help eliminate or reduce that behavior?**

Must consider:

- Goals person pursuing at time and whether reasonable given circumstances
- Whether and how goals conflicted with each other (e.g., safety vs. efficiency, production vs. protection)
- Reasonableness of goal priorities in case of conflicts
- Unwritten rules and norms that may have played a role in behavior
- Available vs. observable information
- Attentional demands
- Organizational context

Human error is a symptom of a system that needs to be redesigned

Engineering Assumptions Underlying STAMP at Boeing

Accidents are a control problem, not a failure problem. To improve workplace safety, establish appropriate controls and workplace environment.

Design safety into the system rather than waiting to learn from accidents/ incidents.

All behavior is affected by system (environment) in which it occurs.

To change behavior, change the environment in which it occurs.

Blame is the enemy of safety.

- In most cases, people do not purposely endanger themselves and others.
- Identify why it made sense to act unsafely and use that to information to redesign the system.

Four Key Systems Thinking Elements of Workplace Safety

1. A strong Safety Culture
2. Safe work environment - systems view using safety control structure
3. A comprehensive Safety Information System provides opportunities to continuously learn and improve safety over time
4. Effective Management

Safety is a control problem, not a failure problem.

Safety Guiding Principles

- **We value human life and health above all else and take action accordingly.**
- **All incidents, injuries and workplace illnesses are preventable.**
- **We are personally accountable for our own and collectively responsible for each other's safety.**
- **In meeting our goals for quality, cost and schedule, we will not compromise safety.**

Suggested Changes to Cultural Principles

- All injuries, accidents, and workplace illnesses are preventable.
- Increasing safety and quality leads to decreasing cost and schedule
- Effective, clear, consistent and timely communication and the sharing of information are essential to achieving an accident-free workplace.
- Workplace safety requires continual learning and improvement

"Find a Way" → "Find a Safe Way"

Tracing Requirements to Cultural Principles

- Establish a Just Culture by blaming the system, not the people.
- Continuously monitor the safety control structure for migration toward a state of higher risk
- Establish robust and reliable communication channels to ensure accurate risk management
- Establish working groups between design engineers, mechanics, safety focals and managers at all levels

All injuries, accidents, and workplace illnesses are preventable
Increasing safety and quality leads to decreasing cost and schedule
Effective, clear, consistent and timely communication and the sharing of information are essential to achieving an accident-free workplace
Workplace safety requires continual learning and improvement

A Clear Purpose for Each Requirement

Building a Control Structure

- Includes action loop (RAA, information & behaviors) and feedback loop (metrics, observations, etc.)
- Product safety practices applied to the workplace
  - Addresses hazards in both development and operations
- Used for engineering analysis to reveals systemic causal conditions of incidents (safety and quality)

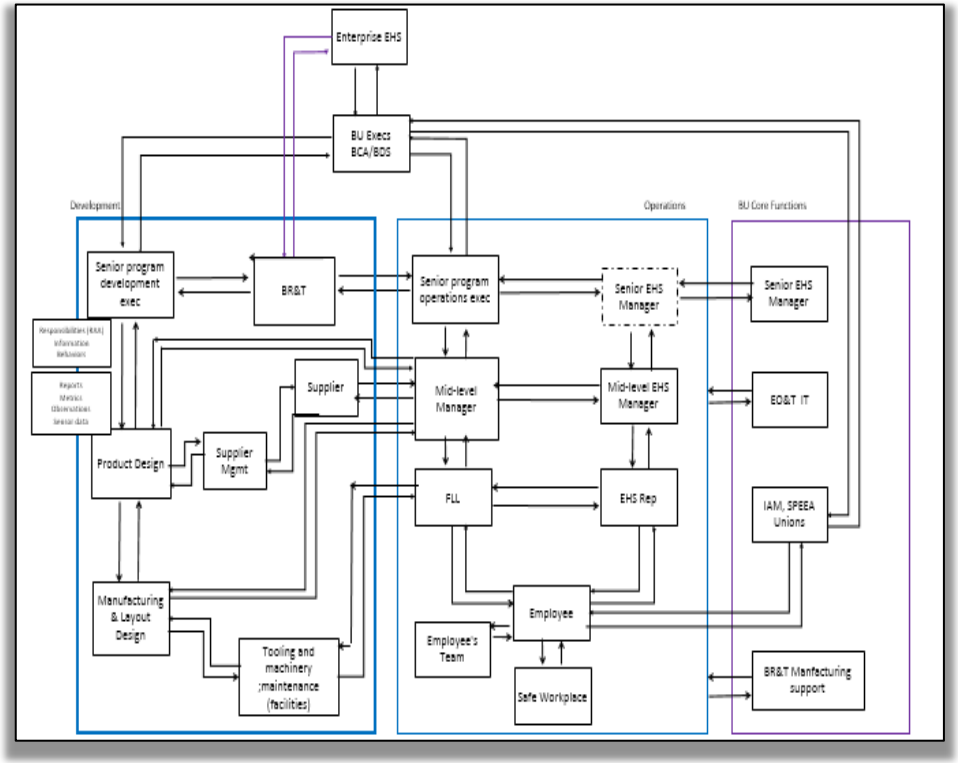

Action Loops and Feedback Loops for All Controlled Processes

Requirements Gaps Analysis and Risk Analysis

- **Examples of findings** that would not have been discovered with usual techniques
  - Lack of a feedback loop for in design activities restricts opportunities to improve requirements based on insights from factory worker incidents
  - Lack of interaction among design engineers, IE's, ME's, mechanics causes development to operations disconnects
  - Supply chain issues are contributing to injuries and require more system wide resolution in the attempts to reduce the injuries
  - Current IT infrastructure needs enhancement to provide timely and relevant information to support safety and quality related decisions

To Change Behavior, Change the System

Using a System Engineering Process

Completed Work

Started from G4Z goals and created a safety culture philosophy statement

What do we want the workplace safety culture to be?

→

Operationalize the philosophy

Created workplace characteristics

→

Create requirements for a safe workplace

Culture, Development, Operations and Information System

→

Modeled Representative Control Structure

Generic enough to leverage to most aircraft production areas

→

Performed Req'ts Gap Analysis

Mapped to current structure
Identified weaknesses, missing functions & new functions

→

Performed Risk Analysis (STPA) on the current structure

Identified what could be improved to meet G4Z goals

Demonstrate system theoretic accident and hazard analysis (CAST)

- Better incident investigation reports

Develop Recommendations

- Implementation plan
- Risk Mgmt Plan for Implementation
- Identify replication opportunities

Active Plan Implementation

- Engage leadership and sites

Activities In Work

The Role of Worker Observation and Input

- **Worker interviews and observation are a rich source of insight into key problem areas in the system control structure.**
- **Both experienced and novice workers can help identify where system interactions may be creating unintended hazards.**
  - For experienced workers, knowledge of prior incidents and a clear perspective into the work environment offer helpful clues into the most severely broken control loops.
  - For novice workers, concerns that their tasks seem counterintuitive or excessively complex may be a sign of a poorly designed procedure or tool.

Project Status for Airplane Production/Delivery

- Analysis of prior incident reports revealed a set of worker procedures that are seldom practiced as designed, leading to high levels of near misses and/or mishaps.

- Through STAMP and human factors analyses, evidence suggest that the procedures themselves, as well as the tools that support the procedures, may be unnecessarily complex.
- Plans are currently underway to redesign the procedures and/or tools that support them.
- This should, in turn, increase procedure compliance and reduce near misses and mishaps.

Everett Delivery Center Grand Opening 2013

Why Knowledge Can't Compensate For Poor Design

A common response to worker mishaps is to increase training and/ or signage.

While these may help temporarily, a better solution is to understand why workers are not acting as expected in the first place.

The more lasting and successful solutions may be to redesign the tasks the workers are being asked to do!

- Better procedures
- Better tools

Identify All Causal Factors, Not Just a "Root Cause"

- ***Root Cause Seduction*: Assuming there is a root cause gives us an illusion of control.**
  - Usually focus on operator error or technical failures
  - Ignore systemic and management factors
  - Leads to a sophisticated "whack a mole" game
    - Fix symptoms but not process that led to those symptoms
    - In continual fire-fighting mode
    - Having the same accident over and over

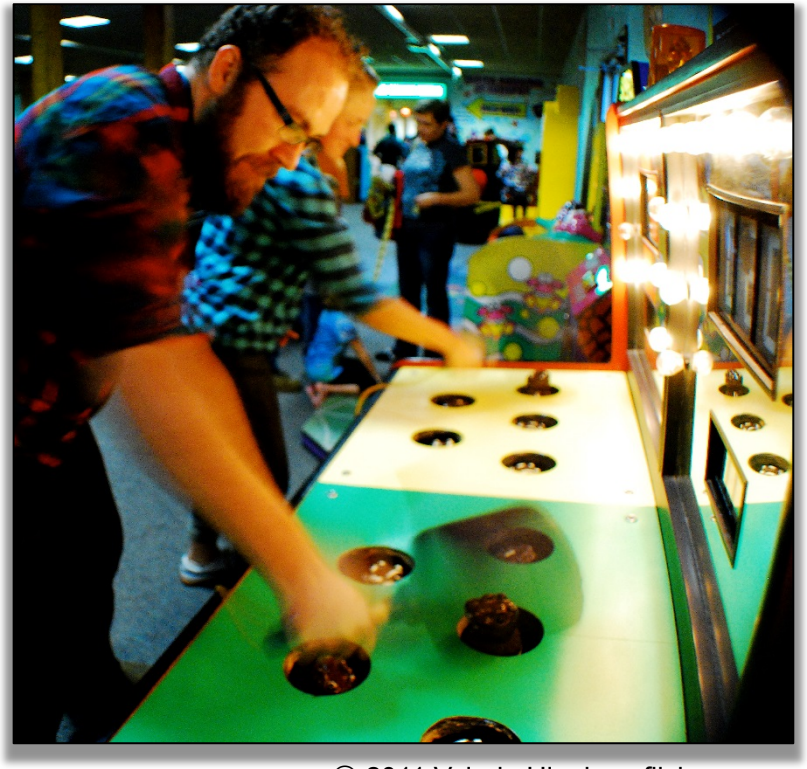

CAST Analysis – Advanced Incident Investigation

Current Approach:
Focuses on worker error and fixing a single incident or individual device or task

Enhanced MIT Approach:

- Focus on the influence of the workplace design and worker's environment
- Uncovering information about the inadequacy of the tools workers are given to do their jobs
- Inadequate work instructions, controls, procedures and oversight
- Role of higher level decisions in creating unsafe conditions

Goal: Design safety into the workplace

- **Review of 2012 Workplace Incident (Severe)**
  - Current approach yielded eleven contributing factors
  - CAST found additional 17 factors most of which were design and process problems
  - CAST enables greater learning to use for continuous improvement

Understanding the System Enables Continuous Learning

Making Boeing safer

Since its launch at the start of 2013, Go for Zero has driven safety deep into nearly every aspect of Boeing's daily activity. Accomplishments include:

Integrating safety at every level of the company, including weekly safety updates to the Boeing CEO

Requiring all managers to establish safety goals

Analyzing every major incident for root causes, and applying corrective action and lessons learned across the enterprise

Completing more than 30,000 safety work orders received by the Shared Services Facilities team and more than 2,600 tooling safety requests

Enacting new processes for working in high-hazard situations including:

- Aircraft towing
- Chemical processes
- Work done at heights
- Confined spaces
- Machining
- Work near overhead cranes
- Work with explosive materials
- Work with hazardous energy
- Parking lots and walkways, for vehicle and pedestrian safety

Establishing consistent companywide standards for the use of safety glasses, high-visibility vests and electronic devices

Conducting regular team safety conversations to recognize successes and identify opportunities to continuously improve workplace safety