A Systematic Safety Control Approach and Practice on Flight Tests of A Low-cost Blended-wing-body Demonstrator

LU YI
(E-mail: rayloui@163.com)
Beihang University and Purdue University

STAMP/STPA Workshop in MIT
March 28, 2013

航空科学与技术国家实验室（筹）适航技术研究中心
Airworthiness Technologies Research Center, NLAA

Introduction of ATRC

- The Airworthiness Technology Research Center (ATRC) is a functional laboratory of Chinese National Laboratory of Aeronautics and Astronautics(NLAA) in Beihang University
- **It focuses on:**
  - Certification standards
  - Design technology for airworthiness
  - System safety
  - Environment and airworthiness
  - Human factors and airworthiness

- Our *3rd International Symposium on Aircraft Airworthiness* will be held in Ecole Nationale de l'Aviation Civile (ENAC, Toulouse, France) on November 19-21, 2013

  The website of ISAA 2013: http://isaa.enac.fr

ISAA2011 in Beijing

ELSEVIER

Available online at www.sciencedirect.com

SciVerse ScienceDirect

Procedia Engineering 17 (2011) 1 – 6

Procedia Engineering

www.elsevier.com/locate/procedia

Proceedings of
2nd International Symposium on
Aircraft Airworthiness
(2nd ISAA, 2011)

October 26-28, 2011, Beijing, China
http://isaa.buaa.edu.cn

Edited by Shuguang ZHANG, Shuiting DING,
Yanlai ZHANG, Junmin DU

中航商用飞机发动机有限责任公司
AVIC COMMERCIAL AIRCRAFT ENGINE CO., LTD
GEA
北京市经济和信息化委员会
中航北京航空材料研究院
BOMBARDIER

THE ORGANIZERS GRATEFULLY ACHNOWLEDGE THE SUPPORT OF K.C. WONG EDUCATION FOUNDATION, HONG KONG.

COMAC
PURDUE UNIVERSITY
JOURNAL OF AERONAUTICS
JASP

Contents

- Motivation
- Context analysis of low-cost demonstrator mishaps
- STAMP/STPA-based safety control
- Conclusion

Subscale demonstrator

Goals:

- Low-speed flight dynamic characteristics test

Features:

- Molding and manual manufacturing
- Composite material combining with wood
- Equipped with automatic flight control system
- Visual remote control or UAV ground station supported


BAE DEMON FLAVIIR (2010)

NASA X-48C (2012)


Mitsubishi ATD-X (2006)


NASA X-43A-LS (2003)

Blended Wing Body (BWB)

- **Blended-wing-body (BWB)** is a future civil transporter configuration without conventional fuselage and tails
- **Its expected advantages**
  - High lift-to-drag ratio in cruise
  - Higher fuel economy and lower noise
  - Future Aircraft-engine integration for more benefit

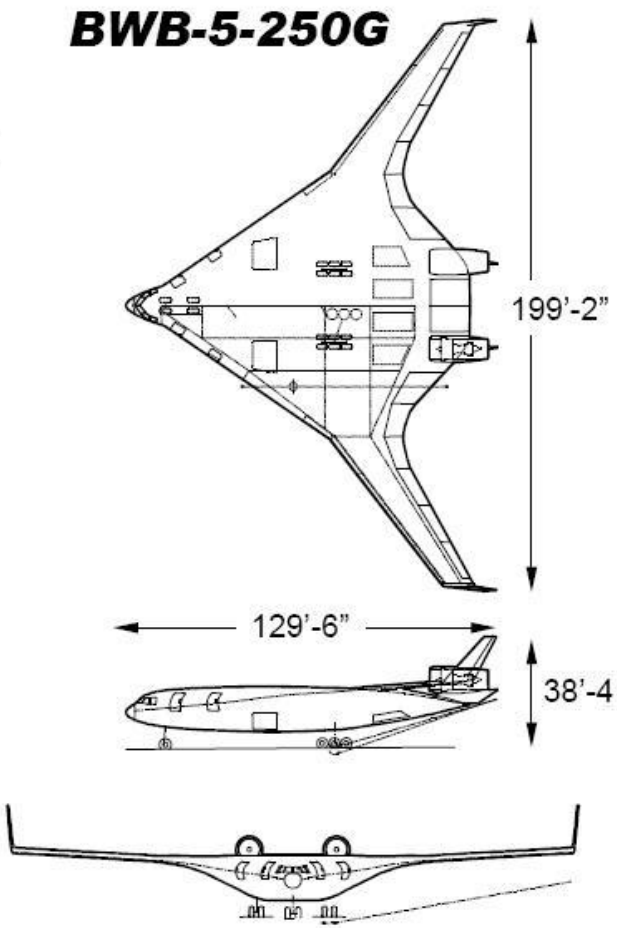

Figure 1. BWB-250 ar

- **Since 2007, our group has developed 4 low-cost BWB demonstrators and operate the flight tests**

A review of our demonstrator mishaps

[redacted]

Low-cost demonstrators features:

- Visual remote control
- Novel configuration or new function demonstration
- Manual manufacturing
- Commercial off-the-shelf products (e.g. servo/electric motor power/lithium battery for aircraft model)

[redacted]

Contents

- ✔ Motivation
- ➢ Context analysis of low-cost demonstrator mishaps
- ➢ STAMP/STPA-based safety control
- ➢ Conclusion

The low-cost demonstrator in Beihang University

Year	Category	Type number	Total flight sorties	Catastrophic accident	Maiden flight loss
From 2007 to 2012	Novel configuration	18	34	14	10
	Conventional configuration	18	26	6	5

- More than 40% demonstrators lost in the maiden flights even by experienced operators
- The ratio of catastrophic accidents exceeded 33%

Mishap contribution factors

The low-cost trap

1. **Lack of academic knowledge and ability to analyze the flight characteristics**
2. **Lack of understanding of reliability and system safety**
   - Without education about system safety
   - No safety expectation
   - Trial-and-error learning
3. **The schedule pressure against overpromised project**
   - parallelize the manufacture with design
4. **Lack of adequate funding**
5. **Lack of the communication with the operator**

Contents

- ✔ Motivation
- ✔ Context analysis of low-cost demonstrator mishaps
- ➢ STAMP/STPA-based safety control
- ➢ Conclusion

Through the reading of "**Engineering a safer world**", we believe:

- Our accidents are not random events
- If the unsafe organization behaviors cannot be constrained, we are doomed to have further accident
- STAMP/STPA approach can provide a guidance to escape from the whack-a-mole trap, paper safety and superficial fixes.

STAMP/STPA-based safety control: a safety-seeking organization

Our preconditions:

- **Cost pressure/limited group staffs**
- **Group member's inadequate understanding on safety**
- **Lack of reliability data of COTS**
- **Without standards and formal procedures**

- Educate group members about safety
- Raise learning culture
- Change bias
- Foster risk awareness

- Control safety information
- Assign & control responsibilities
- Define and maintain formal com munication channels

- STPA based hazard analysis
- System redesign
- Establish pre-flight review and operation procedures

BUAA-BWB Safety Control Structure

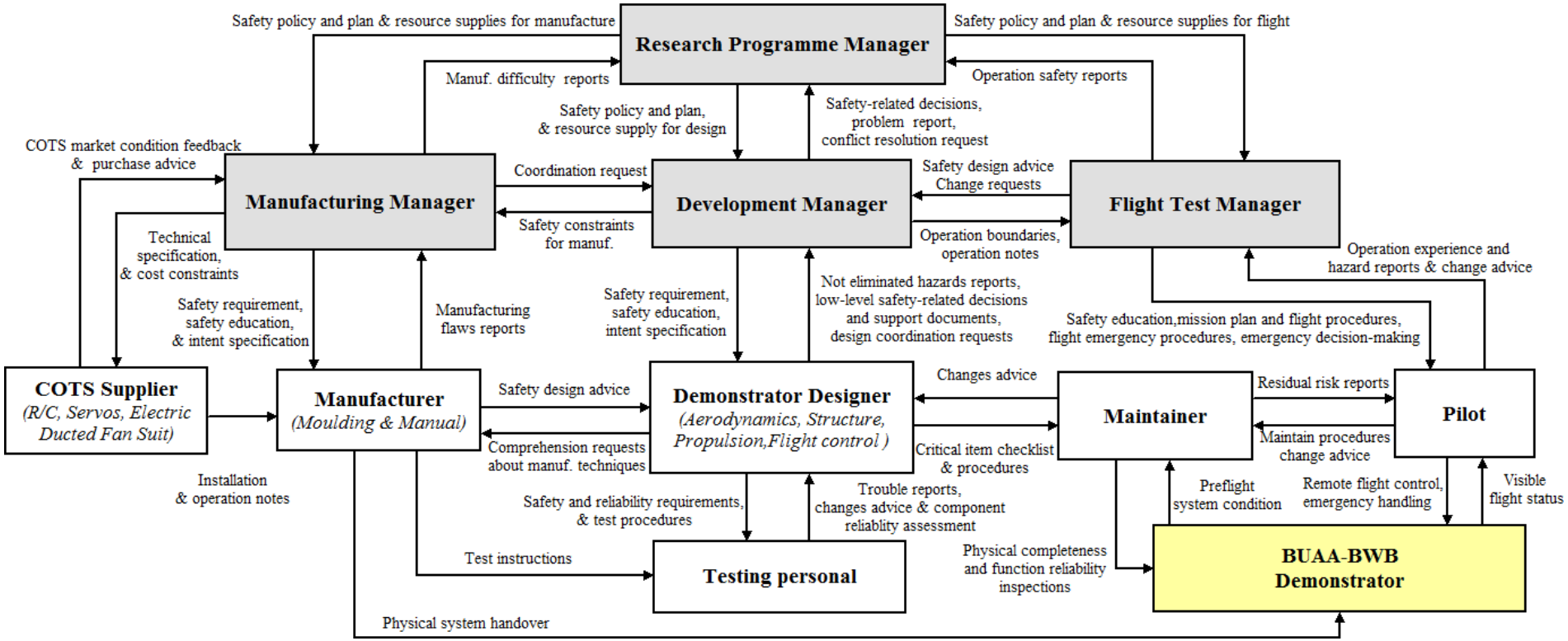

- It is fair to assume that teaching engineering students about accident causation and system safety can help instill in them a proper safety culture before they enter the workforce or it can accelerate their acquisition of an organization's safety culture (Joseph Saleh, 2012).

An Example of Organizational Hazard Analysis

High-level organization hazard

[H1]Accept a tacit or retrospective confirmation based on past experience or uncertain information without evaluation

Research Program Manager

Safety-related Responsibility

- Provide the leadership and oversight for the three leaders and ensure their abilities about safety issues
- Establish the safety control plan combinning with progress schedule to provide baselines for compliance evaluation and ensure the review procedures for update and improvment
- Establish the priority of safety goal and maintain regular group meeting to ensure the communications and rewards to low-level members to support their confidence on safety commitment and understanding of safety value
- Establish high-level safety requirement, dispense the proper parts to the leaders and oversee the implementation by reviewing of regular undated technical report and require the safety analysis must be highlighted as a single part
- Establish the requirement to analyze past accident and experience formally to find the potential factors
- Organize the system safety and hazard analysis education, assign related personnel for training courses and require the feedback of members' learning condition
- Assign the responsibility, authority and accountability of each members and give the authorities to the leaders for dynamic adjusting and request the reason report

Physical System Safety Constraints

Item	Hazard	Safety Constraints	Safety Requirements
1	Inability of control for intended flight	The operator should always be able to control the attitude and flight path during the whole flight	The demonstrator component failure, abnormal flight characteristic, operator error cannot impede or induce the vehicle into an uncontrolled status or out of the safe performance envelope. The environmental disturbance cannot induce or deteriorate such status.
	…	…	…
…	The damage to people or properties on the ground	The vehicle should keep adequate distance and height against the people and properties on the ground . The people on the ground should stay in designated areas	The operating airspace should be planned, the vehicle must be controlled with a restriction with which the operator can always clearly identify the vehicle's flight attitude

Hazardous Behaviors Identification in Approaching and Landing Process of BUAA-BWB

Control Action	Not Given or not followed	Given Incorrectly	Wrong Timing or order	Stopped too soon or applied too long
…	…	…	…	…
Flat flight path	(1a)	Excessively, unintended go-around or (1b) Insufficiently, heavy or crash landing	Too early, go-around	Stopped too soon, crash landing
			Too late, crash landing	
			Wrong order, go-around	Applied too long, tail strike
…	…	…	…	…
Touchdown and decelerating on the ground	(3a) Heavy landing	Incorrect attitude causing vehicle damage, or veering off the runway	Too early,(3a)	Stopped too soon, veering off the runway
			Too late, over-running of the runway	
			Wrong order, crash landing	Applied too long, over-running of the runway

Detailed Analysis for "Adverse Handling Characteristic" induced by control surfaces

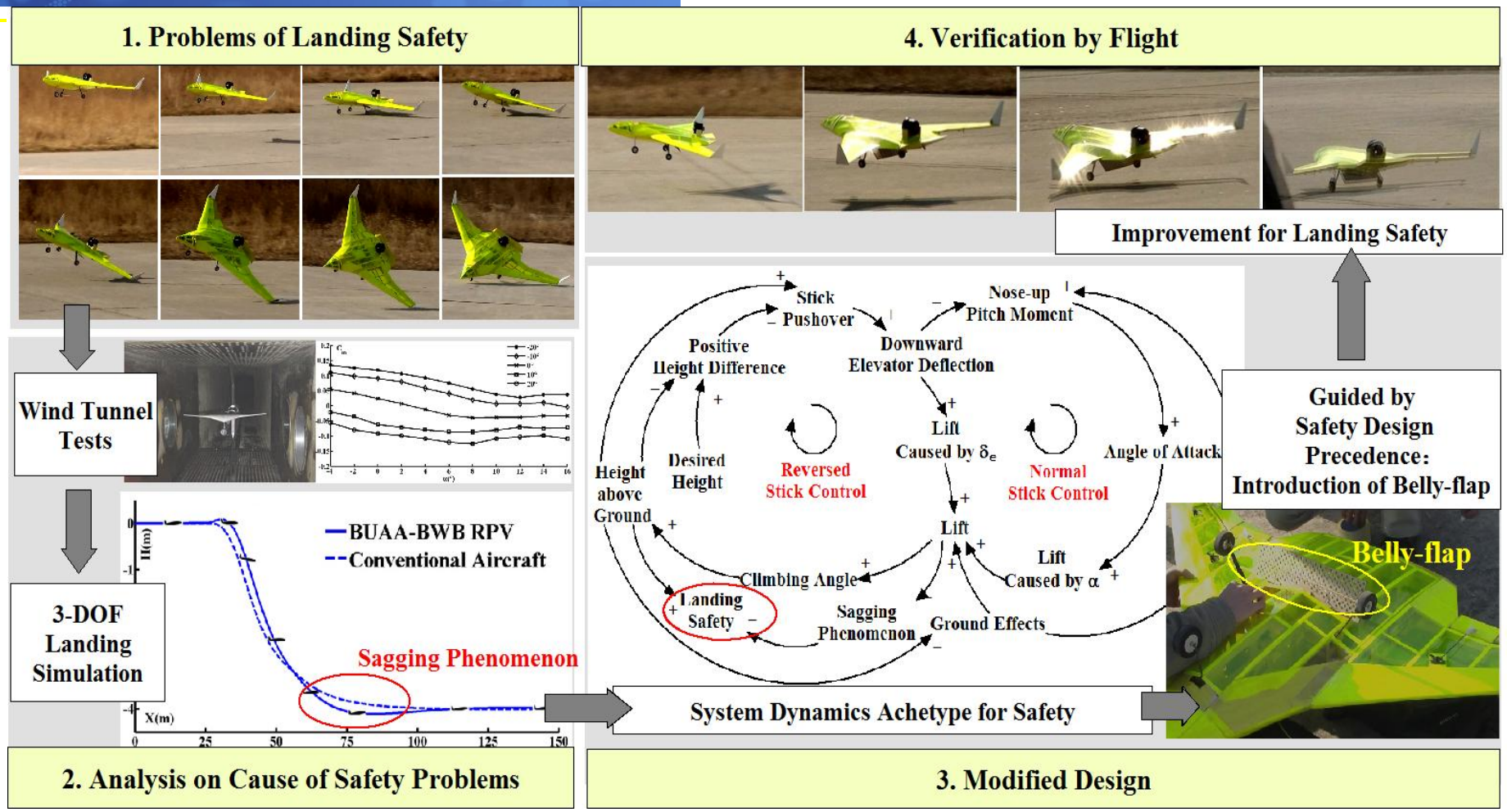

This result has been published:

LU Yi, ZHANG Shuguang, LI Xueqing, 2012. A Hazard Analysis-based Approach to Improve the Landing Safety of a BWB Remotely Piloted Vehicle, Chinese Journal of Aeronautics, Vol. 25 (6): 846-853

Verification by flight test of BUAA-BWB-4

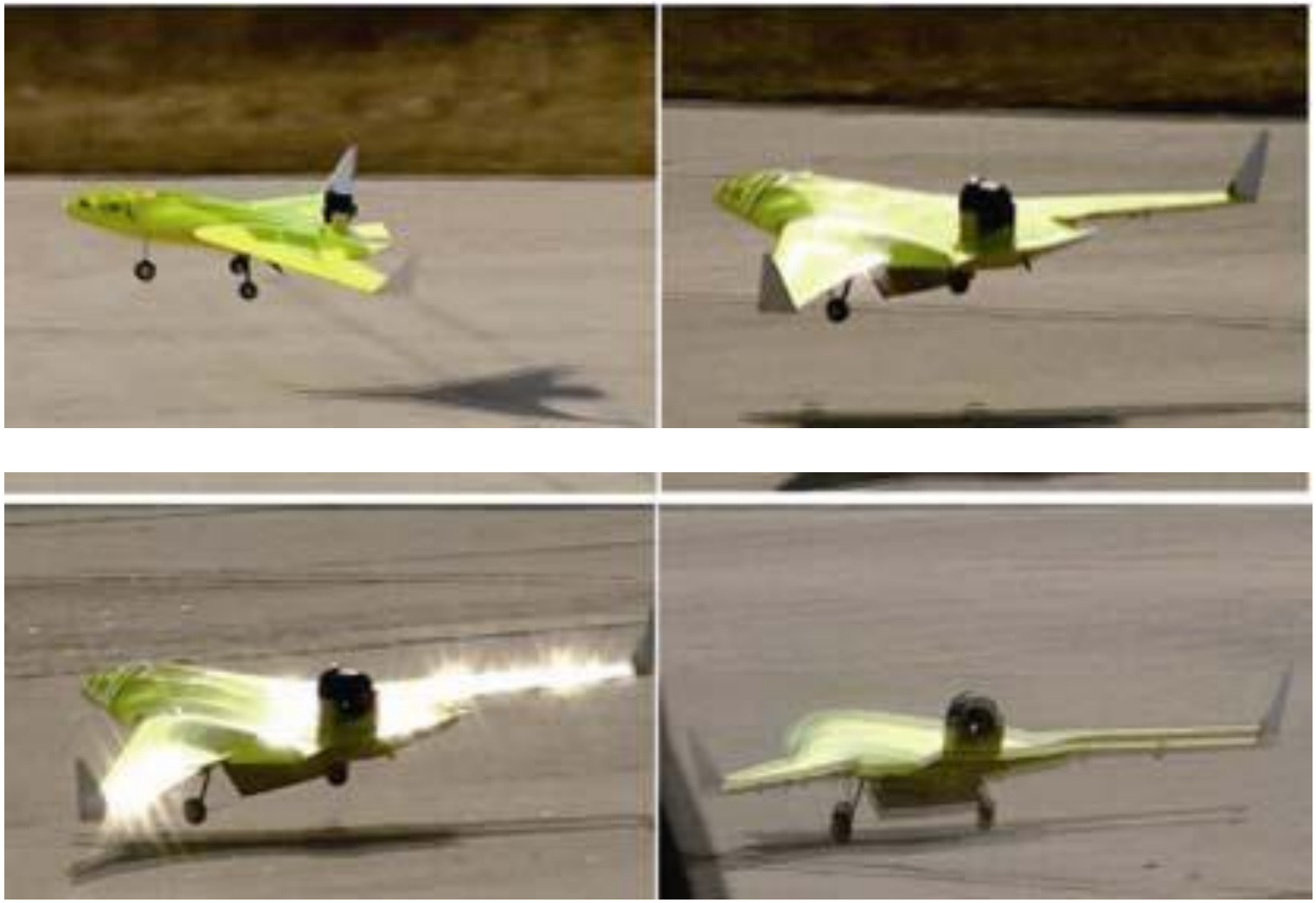

Additional discussion

- Our demonstrator safety control has the effectiveness limitation, resulting from the “low-cost” pressure:
  - ✓ Lack of real-time flight parameter monitoring and recording
  - ✓ Lack of high quality pre-flight training of the operator

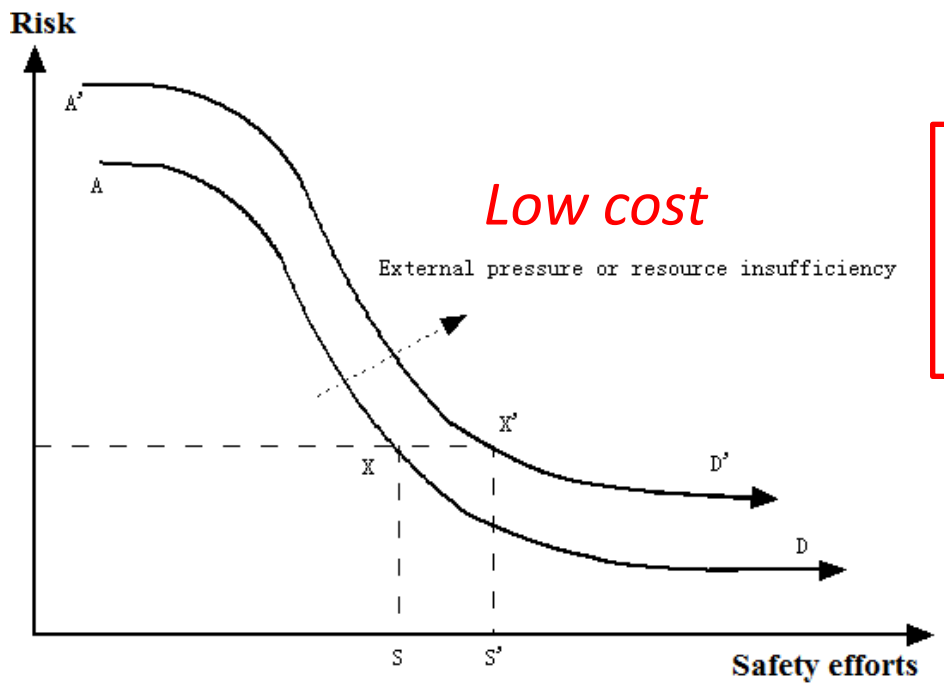

Our organization presents as a sub-scale organizational behavior demonstrator

Conclusion

- In fact, only being “running scared” but not complacent about the past success like the most high-reliability organizations, we can continuously benefit from our safety control on the low-cost pressure for a long time.
- The safety constraints must continue to be enforced as changes and adaptations to the system design over time. That is also a part of STPA should do.
- If you are interested in our experience, we are glad to share more details. Your advice will help our further research of a multi-function flight control system equipped BWB demonstrator

Thank you!

Q&A

LU YI

(E-mail: rayloui@163.com)

Beihang University and Purdue University